REFER TO OUTDOOR DINING PLANS

PROPOSED CARPARK ENTRANCE

STAGE

TERRACE

MALE 15 m²

FEMALE 17 m²

HAND DRYER DB-A – P24

AUTO DOOR DB-1 – P17

UTILISE THE EXISTING BULKHEAD TV POWER CIRCUIT IN THIS AREA TO SUPPLY THESE NEW BULKHEAD (BH) OUTLETS.

EXISTING ELECTRICAL SERVICES WITHIN THIS AREA TO BE REMOVED, UNLESS NOTED OTHERWISE.

UTILISE THE EXISTING BULKHEAD TV POWER CIRCUIT IN THIS AREA TO SUPPLY THESE NEW BULKHEAD (BH) OUTLETS.

NEW 150 WIDE POWER, 150 WIDE COMMUNICATIONS AND 300 WIDE HYDRAULIC SERVICES CABLE TRAYS WITHIN THE CEILING SPACE TO CONNECT THE MEZZANINE PLANT ROOM TO THE CEILING SPACE OVER THE NEW BAR.

RELOCATE THE 2 EXISTING TV POWER OUTLETS TO THE 2 NEW TV LOCATIONS.

UTILISE THE EXISTING POWER OUTLET CIRCUIT IN THIS AREA TO SUPPLY THE NEW USB POWER OUTLETS.

NEW 300 WIDE POWER AND 300 WIDE COMMUNICATIONS CABLE TRAYS WITHIN THE CEILING SPACE TO CONNECT THE OFFICE CEILING SPACE TO THE MEZZANINE PLANT ROOM.

CIRCUIT THESE OUTLETS WITH THE EXISTING KITCHEN POWER CIRCUITS.

CIRCUIT THESE OUTLETS WITH THE ADJACENT EXISTING BELOW BENCH POWER OUTLETS.

RELOCATE THE EXISTING 6RU COMMUNICATIONS RACK FROM THE COMMUNICATIONS ROOM TO BELOW THE BAR TO HOUSE THE EXISTING ACTIVE EQUIPMENT.

THE COMMUNICATIONS SERVICES TO THE EXISTING TAB AND KENO SCREENS AND TERMINALS IN THIS AREA ARE TO REMAIN AS IS.

REMOVE EXISTING OUTLET AT 2200 AFFL.

DB-A – P2

DB-A – P1

AC 2 DB-A – P26

AC 1 DB-A – P25

HAND DRYER DB-A – P22

AC 3 DB-A – P27

HAND DRYER DB-A – P21

HAND DRYER DB-A – P23

MSB

DB-K

DB-G

MDF

R1.10 DOSA

R1.08 PLANT

R1.05 M WC

R1.06 ACC WC

R1.04 F WC

R1.02 GAMING

R1.03 KENO/ LOUNGE

NEW PATH

EX PORTE COCHERE

REFUGE

MECH ENCLOSURE

MRV

DELIVERIES

CIRCUIT WITH THE DRIVE THRU SERVERY POWER OUTLETS.

EXISTING DRIVE THRU

NOTE:

REFER TO DRAWING C3446a-E03.dwg FOR ADDITIONAL FIRE ALARM SERVICES.

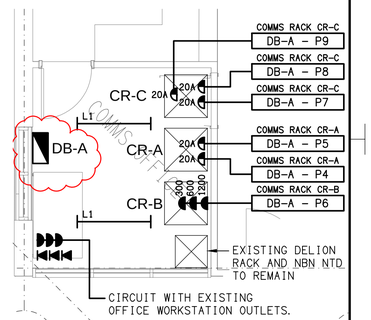

DETAIL A

DATA ROOM PLAN

SCALE 1:50

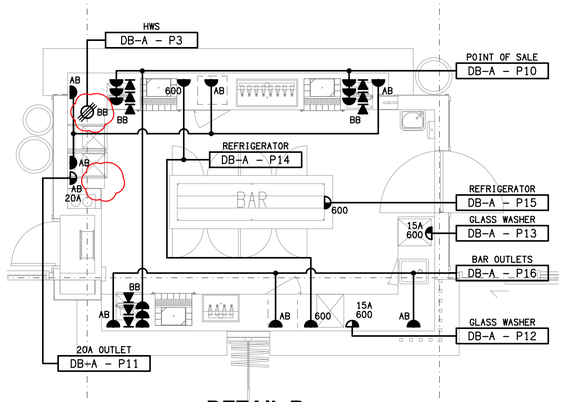

DETAIL B

NEW BAR PLAN

SCALE 1:50

REV:	DESCRIPTION:	DATE:
C	CONSTRUCTION	15/12/2025

ELECTRICAL DESIGN GROUP BRISBANE PTY LTD
ACN 092 710 793

TRADING AS:
ELECTRICAL DESIGN GROUP

THE COPYRIGHT OF THIS DRAWING REMAINS THE PROPERTY OF THE ELECTRICAL DESIGN GROUP.

USE FIGURED DIMENSIONS IN PREFERENCE TO SCALE.

ALL DIMENSIONS TO BE VERIFIED ONSITE.

ELECTRICAL DESIGN GROUP
ELECTRICAL BUILDING SERVICES CONSULTANTS
BRISBANE GOLD COAST
P.O.Box 15, Sherwood Q.4075
Phone: (07) 3278 4375
Email: brisbane@edg.net.au
Web: www.edg.net.au

PROJECT:
MARABOON TAVERN, EMERALD
2025 ALTERATIONS

CORNER HOSPITAL ROAD & ESMOND STREET, EMERALD

DRAWING:
ELECTRICAL SERVICES
TAVERN FLOOR PLAN

SCALE: 1:100 UNO AT A1

PROJECT NO:	DRAWING NO:	REVISION:
C3446a	E04	C